DS-2DE4415W-DE3 (D)
4 MP 15 × Network Speed Dome

Hikvision DS-2DE4415W-DE3 4 MP 15 × Network Speed Dome adopts 1/2.8" progressive scan CMOS chip. With the 15 × optical zoom lens, the camera offers more details over expansive areas.

This series of cameras can be widely used for different indoor environment.

Key Features

- 1/2.8" progressive scan CMOS
- Up to 2560 × 1440@30fps resolution
- Excellent low-light performance with powered-by-DarkFighter technology
- 15 × optical zoom, 16 × digital zoom
- Digital WDR, HLC, BLC, 3D DNR, Defog, EIS, Regional Exposure, Regional Focus
- 12 VDC & PoE (802.3 at, class4)
- Support H.265+/H.265 video compression

Specification

Camera Module	
Image Sensor	1/2.8" progressive scan CMOS
Min. Illumination	Color: 0.005 Lux @(F1.6, AGC ON) B/W: 0.001Lux @(F1.6, AGC ON)
White Balance	Auto/Manual/ATW (Auto-tracking White Balance)/Indoor/Outdoor/Fluorescent Lamp/Sodium Lamp
Gain	Auto/Manual
Shutter Time	50Hz: 1/1 s to 1/30,000 s 60Hz: 1/1 s to 1/30,000 s
Day & Night	IR Cut Filter
Digital Zoom	16 ×
Privacy Mask	24 programmable privacy masks, mask color configurable
Focus Mode	Auto/Semi-automatic/Manual
WDR	Digital WDR
Lens	
Focal Length	5 mm to 75 mm, 15 × optical zoom
Zoom Speed	Approx. 2.3 s (optical lens, wide-tele)
Field of View	Horizontal field of view: 55° to 4° (Wide-Tele) Vertical field of view: 33° to 2.2° (Wide-Tele) Diagonal field of view: 61.5° to 4.6° (Wide-Tele)
Working Distance	100 mm to 1500 mm (wide-tele)
Aperture Range	F1.6 to F2.8
PTZ	
Movement Range (Pan)	360° endless
Pan Speed	Configurable, from 0.1°/s to 160°/s Preset speed: 160°/s
Movement Range (Tilt)	From 0° to 90° (auto-flip)
Tilt Speed	Configurable, from 0.1°/s to 120°/s Preset Speed: 120°/s
Proportional Zoom	Yes
Presets	300
Patrol Scan	8 patrols, up to 32 presets for each patrol
Pattern Scan	4 pattern scans, record time over 10 minutes for each scan
Power-off Memory	Yes
Park Action	Preset/Pattern Scan/Patrol Scan/Auto Scan/Tilt Scan/Random Scan/Frame Scan/Panorama Scan
3D Positioning	Yes
PTZ Position Display	Yes
Preset Freezing	Yes
Scheduled Task	Preset/Pattern Scan/Patrol Scan/Auto Scan/Tilt Scan/Random Scan/Frame Scan/Panorama Scan/Dome Reboot/Dome Adjust/Aux Output
Compression Standard	
Video Compression	Main Stream: H.265+/H.265/H.264+/H.264 Sub-stream: H.265/H.264/MJPEG Third Stream: H.265/H.264/MJPEG
H.264 Type	Baseline Profile/Main Profile/High Profile
H.264+	Yes
H.265 Type	Main Profile
H.265+	Yes
Video Bitrate	32 Kbps to 16384 Kbps

SVC	Yes
Smart Features	
Basic Event	Motion Detection, Video Tampering Detection, Exception
Smart Event	Intrusion Detection, Line Crossing Detection, Region Entrance Detection, Region Exiting Detection, Object Removal Detection, Unattended Baggage Detection
Smart Record	ANR (Automatic Network Replenishment), Dual-VCA
ROI	Main stream, sub-stream, and third stream respectively support four fixed areas.
Image	
Max. Resolution	2560 × 1440
Main Stream	50Hz: 25fps (2560 × 1440, 2048 × 1536, 1920 × 1080, 1280 × 960, 1280 × 720) 50fps (1920 × 1080, 1280 × 960, 1280 × 720) 60Hz: 30fps (2560 × 1440, 2048 × 1536, 1920 × 1080, 1280 × 960, 1280 × 720) 60fps (1920 × 1080, 1280 × 960, 1280 × 720)
Sub-Stream	50Hz: 25fps (704 × 576, 640 × 480, 352 × 288) 60Hz: 30fps (704 × 480, 640 × 480, 352 × 240)
Third Stream	50Hz: 25fps (1920 × 1080, 1280 × 960, 1280 × 720, 704 × 576, 640 × 480, 352 × 288) 60Hz: 30fps (1920 × 1080, 1280 × 960, 1280 × 720, 704 × 480, 640 × 480, 352 × 240)
Image Enhancement	HLC/BLC/3D DNR/Defog/EIS/Regional Exposure/Regional Focus
Network	
Network Storage	Built-in memory card slot, support Micro SD/SDHC/SDXC, up to 256 GB; NAS (NFS, SMB/CIFS), ANR
Protocols	IPv4/IPv6, HTTP, HTTPS, 802.1x, Qos, FTP, SMTP, UPnP, SNMP, DNS, DDNS, NTP, RTSP, RTCP, RTP, TCP/IP, UDP, IGMP, ICMP, DHCP, PPPoE, Bonjour
API	ONVIF (Profile S, Profile G, Profile T), ISAPI, SDK
Simultaneous Live View	Up to 20 channels
User/Host	Up to 32 users 3 levels: Administrator, Operator and User
Security Measures	User authentication (ID and PW), Host authentication (MAC address); HTTPS encryption; IEEE 802.1x port-based network access control; IP address filtering
Client	iVMS-4200, iVMS-4500, iVMS-5200, Hik-Connect
Web Browser	IE 8 to 11, Chrome 31.0+, Firefox 30.0+
Interface	
Network Interface	1 RJ45 10 M/100 M Ethernet, PoE (802.3 at, class4)
General	
Language (Web Browser Access)	32 languages. English, Russian, Estonian, Bulgarian, Hungarian, Greek, German, Italian, Czech, Slovak, French, Polish, Dutch, Portuguese, Spanish, Romanian, Danish, Swedish, Norwegian, Finnish, Croatian, Slovenian, Serbian, Turkish, Korean, Traditional Chinese, Thai, Vietnamese, Japanese, Latvian, Lithuanian, Portuguese (Brazil)
Power	12 VDC, 2.0 A and PoE (802.3 at), 42.5 to 57 VDC, 0.6 A, class4 Max.: 18 W
Working Temperature	-10°C to 50°C (-14°F to 122°F)
Working Humidity	≤ 90%
Protection Level	4000V Lightning Protection, Surge Protection and Voltage Transient Protection
Material	ADC 12, PC+ABS, PC/PMMA
Dimensions	Ceiling mounting model: Φ 165 mm × 179.5 mm (Φ 6.50" × 7.07") In-ceiling mounting model: Φ 165 mm × 168 mm (Φ 6.50" × 6.61")
Weight	Approx. 2 kg (4.41 lb)

DORI

The DORI (detect, observe, recognize, identify) distance gives the general idea of the camera ability to distinguish persons or objects within its field of view.

It is calculated based on the camera sensor specification and the criteria given by EN 62676-4: 2015.

DORI	Detect	Observe	Recognize	Identify
Definition	25 px/m	63 px/m	125 px/m	250 px/m
Distance (Tele)	1500.0 m (4921.3 ft)	595.2 m (1952.76 ft)	300.0 m (984.3 ft)	150.0 m (492.1 ft)

Available Model

DS-2DE4415W-DE3 (D), 12 VDC & PoE (802.3 at, class4)

Dimensions

Ceiling Mounting

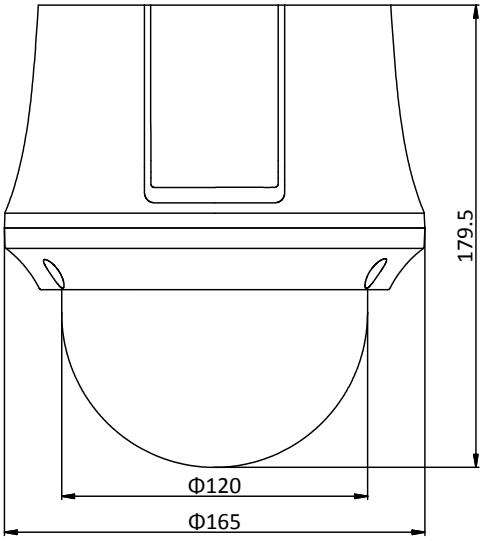

In-Ceiling Mounting

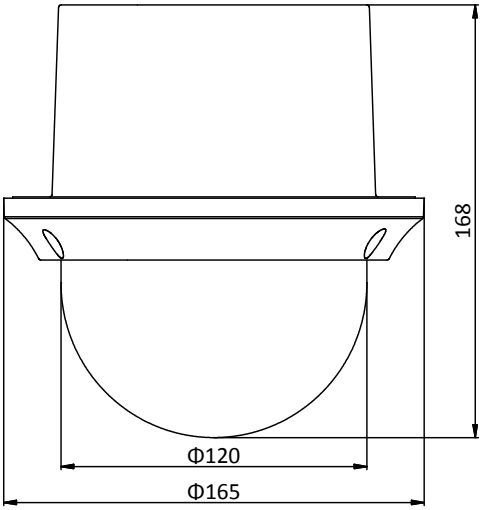

Unit: mm

Accessory

Included:

ASW0081-1220002W

Power adapter

Optional:

LAS60-57CN-RJ45

Hi-PoE midspan

DS-1100KI

Network Keyboard

DS-1005KI

USB Joy-stick

Distributed by

Headquarters
No.555 Qianmo Road, Binjiang District,
Hangzhou 310051, China
T +86-571-8807-5998
overseasbusiness@hikvision.com

Hikvision USA
T +1-909-895-0400
sales.usa@hikvision.com

Hikvision Europe
T +31-23-5542770
sales.eu@hikvision.com

Hikvision UK & Ireland
T +01628-902140
sales.uk@hikvision.com

Hikvision UAE
T +971-4-4432090
salesme@hikvision.com

Hikvision Russia
T +7-495-669-67-99
saleru@hikvision.com

Hikvision Australia
T +61-2-8599-4233
salesau@hikvision.com

Hikvision Italy
T +39-0438-6902
info.it@hikvision.com

Hikvision South Africa
Tel: +27 (10) 0351172
sale.africa@hikvision.com

Hikvision Singapore
T +65-6684-4718
sg@hikvision.com

Hikvision Korea
T +82-(0)31-731-8817
sales.korea@hikvision.com

Hikvision India
T +91-22-28469900
sales@pramahikvision.com

Hikvision Brazil
T +55 11 3318-0050
Latam.support@hikvision.com

Hikvision France
T +33(0)1-85-330-450
info.fr@hikvision.com

Hikvision Spain
T +34-91-737-16-55
info.es@hikvision.com

Hikvision Poland
T +48-22-460-01-50
info.pl@hikvision.com

Hikvision Canada
T +1-866-200-6690
sales.canada@hikvision.com

Hikvision Turkey
T +90 (216)521 7070- 7074
sales.tr@hikvision.com

Hikvision Kazakhstan
T +7-727-9730667
nikia.panfilov@hikvision.ru

Hikvision Tashkent
T +99-87-1238-9438
uzb@hikvision.ru

Hikvision Indonesia
T +62-21-2933759
Sales.Indonesia@hikvision.com

Hikvision Thailand
T +662-275-9949
sales.thailand@hikvision.com

Hikvision Malaysia
T +601-7652-2413
sales.my@hikvision.com

Hikvision Vietnam
T +84-974270888
sales.vt@hikvision.com

Hikvision Hong Kong
T +852-2151-1761
info.hk@hikvision.com

Hikvision Colombia
sales.colombia@hikvision.com

© Hikvision Digital Technology Co., Ltd. 2020 | Data subject to change without notice | 05061420200908